OWNER'S MANUAL

Mini VRF (triphasic and monophasic)

KMF-80 DVN3	KMF-140 DVN2	KMF-140 DTN2
KMF-105 DVN3	KMF-160 DVN2	KMF-160 DTN2
KMF-120 DVN2	KMF-120 DTN2	KMF-180 DTN2

Original instructions

Thank you very much for purchasing our air conditioner. Before using your air conditioner, please read this manual carefully and keep it for future reference.

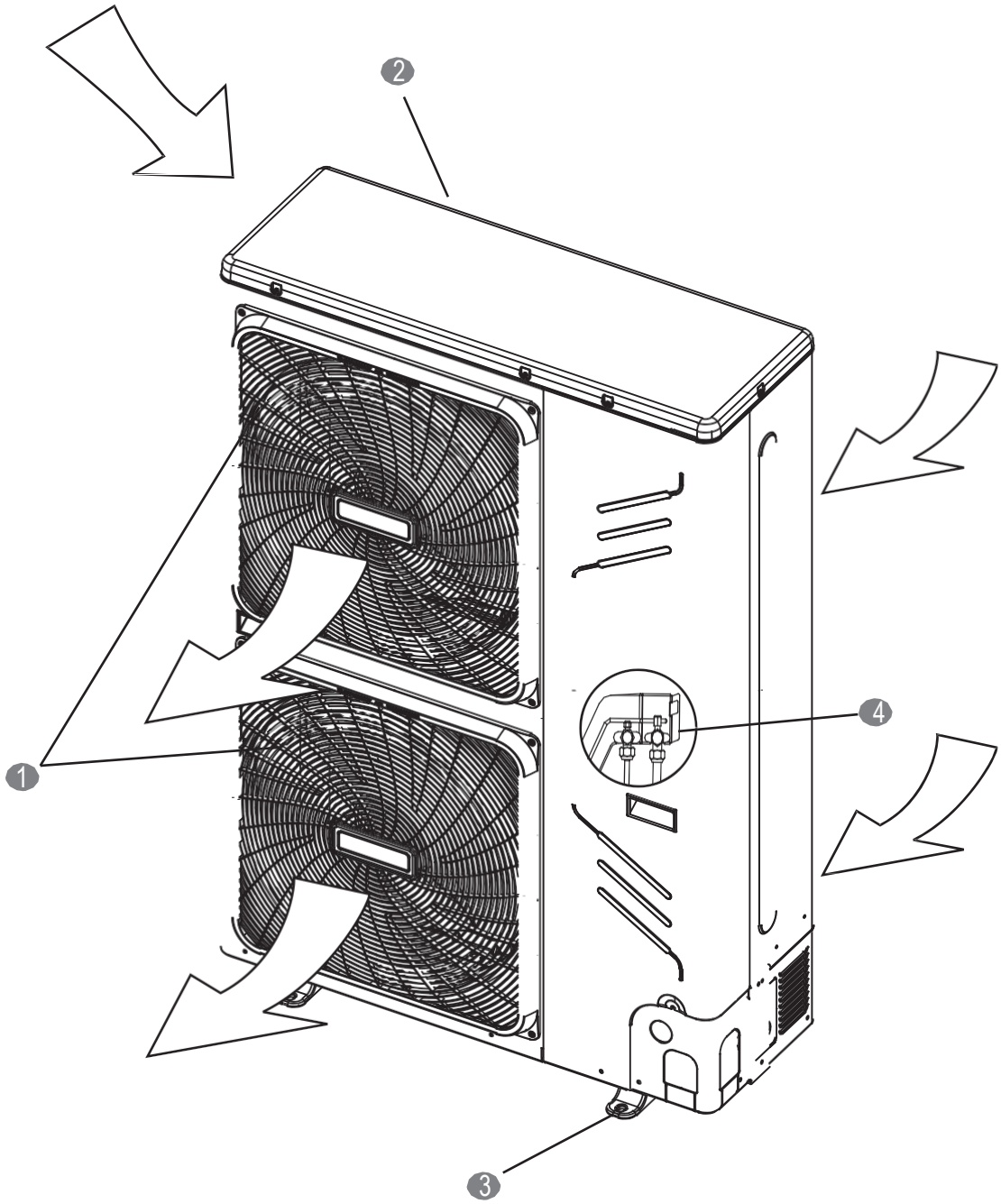

Fig.1

1. air outlet
2. air inlet
3. Fix leg
4. Refrigerant piping connection part (connection part in side)

NOTE

All the pictures in this manual are for explanation purpose only. They may be slightly different from the air conditioner you purchased (depend on model). The actual shape shall prevail.

16kW complying with IEC 61000-3-12.

CONTENTS PAGE

IMPORTANT SAFETY INFORMATION.....1
PARTS NAMES.....2
OPERATION RANGE.....3
OPERATION AND PERFORMANCE.....3
MALFUNCTION CODE OF OUTDOOR UNIT.....4
FOLLOWING SYMPTOMS ARE NOT AIR CONDITIONER TROUBLES.....6
TROUBLESHOOTING.....6

1. IMPORTANT SAFETY INFORMATION

To prevent injury to the user or other people and property damage, the following instructions must be followed. Incorrect operation due to ignoring of instructions may cause harm or damage.

The safety precautions listed here are divided into two categories. In either case, important safety information is listed which must be read carefully.

WARNING

Failure to observe a warning may result in serious injuries. The appliance shall be installed in accordance with national wiring regulations.

CAUTION

Failure to observe a caution may result in injury or damage to the equipment.

WARNING

The appliance should not be used by children without supervision.

This appliance can be used by children aged from 8 years and above and persons with reduced physical, sensory or mental capabilities or lack of experience and knowledge if they have been given supervision or instruction concerning use of the appliance in a safe way and understand the hazards involved. Children shall not play with the appliance. Cleaning and user maintenance shall not be made by children without supervision.

Ask your dealer for installation of the air conditioner.
Incomplete installation performed by yourself may result in a water leakage, electric shock, and fire.

Ask your dealer for improvement, repair, and maintenance.
Incomplete improvement, repair, and maintenance may result in a water leakage, electric shock, and fire.

In order to avoid electric shock, fire or injury, or if you detect any abnormality such as smell of fire, turn off the power supply and call your dealer for instructions.

Never let the indoor unit or the remote controller get wet.
It may cause an electric shock or a fire.

Never press the button of the remote controller with a hard, pointed object.
The remote controller may be damaged.

Never replace a fuse with that of wrong rated current or other wires when a fuse blows out.
Use of wire or copper wire may cause the unit to break down or cause a fire.

It is not good for your health to expose your body to the air flow for a long time.

Do not insert fingers, rods or other objects into the air inlet or outlet.
When the fan is rotating at high speed, it will cause injury.

Never use a flammable spray such as hair spray, lacquerer paint near the unit.
It may cause a fire.

Never touch the air outlet or the horizontal blades while the swing flap is in operation.
Fingers may become caught or the unit may break down.

Never put any objects into the air inlet or outlet.
Objects touching the fan at high speed can be dangerous.

Never inspect or service the unit by yourself.
Ask a qualified service person to perform this work.

Do not dispose this product as unsorted municipal waste. Collection of such waste separately for special treatment is necessary.
Do not dispose of electrical appliances as unsorted municipal waste, use separate collection facilities. Contact your local government for information regarding the connection systems available.

If electrical appliances are disposed of in landfills or dumps, hazardous substances can leak into the groundwater and get into the food chain, damaging your health and well-being.

To prevent refrigerant leak, contact your dealer.
When the system is installed and runs in a small room, it is required to keep the concentration of the refrigerant, if by any chance coming out, below the limit. Otherwise, oxygen in the room may be affected, resulting in a serious accident.

The refrigerant in the air conditioner is safe and normally does not leak.
If the refrigerant leaks in the room, contact with a fire of a burner, a heater or a cooker may result in a harmful gas.

Turn off any combustible heating devices, ventilate the room, and contact the dealer where you purchased the unit.
Do not use the air conditioner until a service person confirms that the portion where the refrigerant leaks is repaired.

CAUTION

Do not use the air conditioner for other purposes.
In order to avoid any quality deterioration, do not use the unit for cooling precision instruments, food, plants, animals or works of art.

Before cleaning, be sure to stop the operation, turn the breaker off or pull out the supply cord.
Otherwise, an electric shock and injury may result.

To avoid electric shock or fire, make sure that an earth leak detector is installed.

Be sure the air conditioner is grounded.
To avoid electric shock, make sure that the unit is grounded and that the earth wire is not connected to gas or water pipe, lightning conductor or telephone earth wire.

To avoid injury, do not remove the fan guard of the outdoor unit.

Do not operate the air conditioner with a wet hand.
An electric shock may happen.

Do not touch the heat exchanger fins.
These fins are sharp and could result in cutting injuries.

Do not place items which might be damaged by moisture under the indoor unit.
Condensation may form if the humidity is above 80%, the drain outlet is blocked, or the filter is polluted.

After a long use, check the unit stand and fitting for damage.
If damaged, the unit may fall and result in injury.

To avoid oxygen deficiency, ventilate the room sufficiently if equipment with burner is used together with the air conditioner.

Arrange the drain hose to ensure smooth drainage.
Incomplete drainage may cause wetting of the building, furniture etc.

Never touch the internal parts of the controller.
Do not remove the front panel. Some parts inside are dangerous to touch, and a machine trouble may happen.

Never expose little children, plants or animals directly to the air flow.
Adverse influence on little children, animals and plants may result.

Do not allow a child to mount on the outdoor unit or avoid placing any object on it.
Falling or tumbling may result in injury.

Do not operate the air conditioner when using a room fumigation - type insecticide.
Failure to observe could cause the chemicals to become deposited in the unit, which could endanger the health of those who are hypersensitive to chemicals.

Do not place appliances which produce open fire in places exposed to the air flow from the unit or under the indoor unit.
It may cause incomplete combustion or deformation of the unit due to the heat.

Do not install the air conditioner at any place where flammable gas may leak out.
If the gas leaks out and stays around the air conditioner, a fire may break out.

The appliance is not intended for use by young children or infirm persons without supervision.

Young children should be supervised to ensure that they do not play with the appliance.

When capacity of indoor unit greater than the sum of 100%, capacity of indoor unit will be attenuated.

When capacity of indoor unit greater than or equal to the sum of 120%, in order to ensure the effectiveness of machine, and then try to open the indoor units at different time.

The outdoor unit window-shades should be periodic cleaning in case of being jammed.
This window-shapes is heat dissipation outlet of components, if being jammed will cause the components to shorten their service life spans because of overheated for a long time.

The temperature of refrigerant circuit will be high, please keep the interconnection cable away from the copper tube.

2. PARTS NAMES

The air conditioner consists of the indoor unit, the outdoor unit, the connecting pipe and the remote controller. *(see Fig.1)*

Force Cooling Control

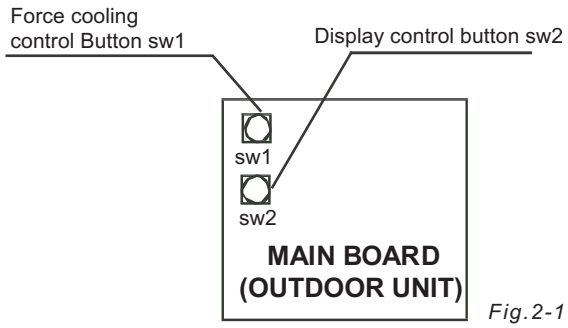

Fig.2-1

Force Cooling Control

Force cooling control of outdoor unit be pressed once that a order to force cooling in indoor unit. When the frequency of outdoor unit change to 44Hz and then running it; indoor fan run in high speed. Press the button again will exit the Force Cooling Control.

Display function

The function of text run circulates as following(12/14/16KW).

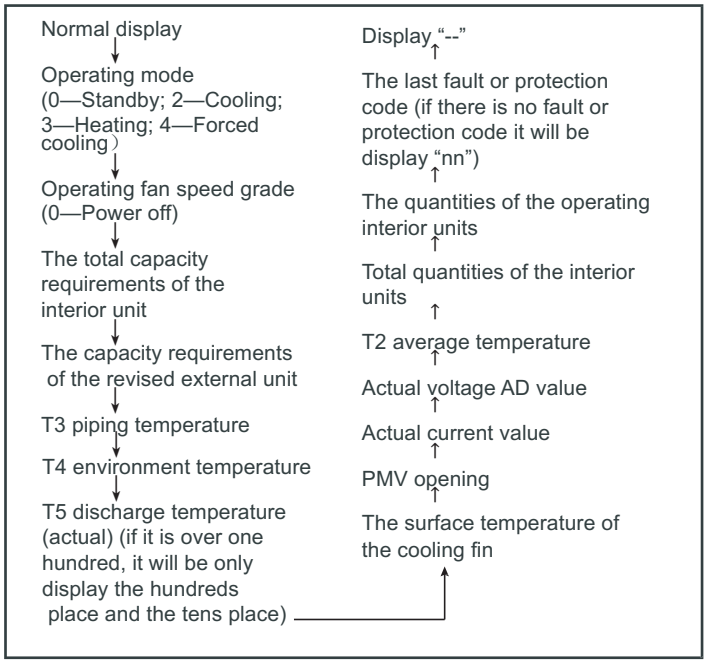

The function of text run circulate as following g(8/10.5/18KW）.

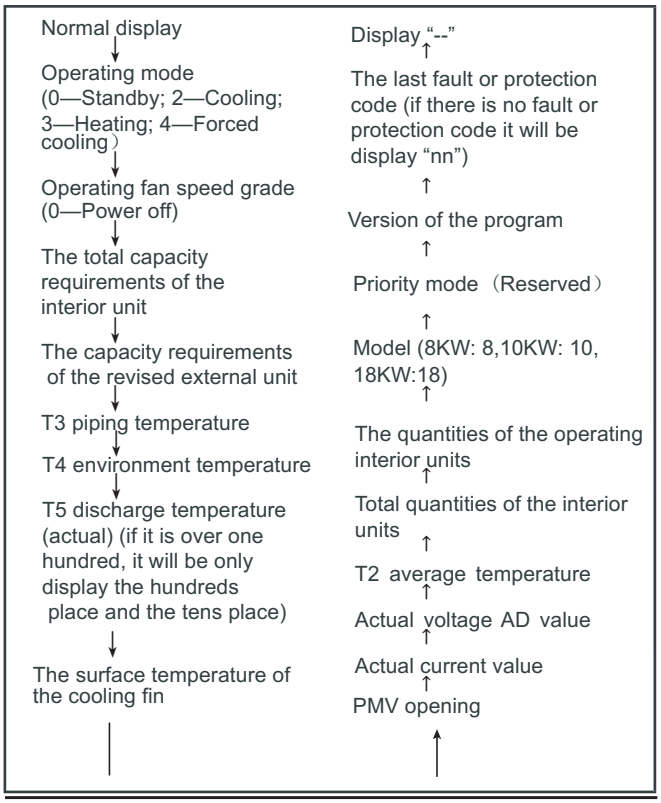

NOTE

- 12 hours preheating is imperative after turning on the power switch. Please do not shut down the power when the unit is supposed to stop running in 24h or shorter time. (This is to warm the crankcase heat box to avoid compulsive start of condenser.)
- Pay attention not to block the air inlet and outlet.
  Blocks may decrease the efficiency of the unit or startup the protector, which will stop running.

3. OPERATION RANGE

Use the system in the following temperature for safe and effective operation. The Max operation temperature for the air conditioner. (Cooling/Heating)

Table 3-1

Temperature / Mode	Outdoor temperature	Room temperature
Cooling operation	-15℃～43℃	17℃～ 32℃
Heating operating	-15℃～27℃	≤27℃

NOTE

1 If air conditioner is used outside the above conditions, it may cause the unit to function abnormally.

2 The phenomenon is normal that the surface of air conditioning may condense water when the relative larger humidity in room, please close the door and window.

3 Optimum performance will be achieved within these operating temperature range.

4 To start the outdoor unit at least the installation must have a demand of 20% of the capacity of the outdoor unit.

4. OPERATION AND PERFORMANCE

4.1 Protection Equipment

This Protection Equipment will enable the Air Conditioner to stop when the Air Conditioner is to be directed running compulsively.

When the Protection Equipment is activated, the Operation Indicator still lights while the Air Conditioner is not running. But the Check Indicator Lights.

The protection equipment may be activated in following conditions:

■ **Cooling Operation**

- The air inlet or air outlet of outdoor unit is blocked.
- Strong wind is Continuously blowing to the air outlet of the outdoor unit.

■ **Heating Operation**

- Too much dust and rubbish adhere to the dust filter in the indoor unit
- The air outlet of indoor unit is choked

NOTE

When the protection equipment starts, please shut down the manual power switch, and restart operation after problem is solved.

4.2 About power cut

- If power is cut during operation, stop all the operation immediately.
- Power comes again. The lamp on the display panel of indoor unit flashes. And then unit will auto-restart.
- Mishandling in operation:
  If mishandling happens because of lighting or mobile wireless, please shut off the manual power switch, and turn on again, then push the ON/OFF button.

4.3 Heating capacity

- The heating operation is a heat-pump process that heat will be absorbed from outdoor air and released in doors. Once the outdoor temperature is decreased, heating capacity decreased cored pindingly.
- Other heating equipment is suggested to be used together when outdoor temperature is too low.
- In some extreme cold upland that buy another indoor unit equipped electrical heater will obtain better performance. (Refer to indoor unit owner's manual for details)

NOTE

1. The motor in Indoor Unit will continue running for 20~30 seconds for to remove residual heat when the Indoor Unit receiving OFF command during heating operation.
2. If the air conditioner malfunction occurs because of disturb, please reconnect the air conditioner to power, then turn on it again.

4.4 Three-minute protection feature

- A protection feature prevents the air conditioner from being activated for approximately 3 minutes when it restarts immediately after operation.

4.5 Cooling and heating operation

- The indoor unit of the intelligent inverter centralized air conditioner can be controlled solely, but the indoor unit in the same system cannot run cooling and heating at the same time.
- When the Cooling and Heating operation confront with each other, the Indoor Unit which are running on Cooling Mode would stop and there will be Standby, or No Priority displayed in the Control Panel. Those Indoor Units which are running on Heating Mode will run continuously.
- If the Air Conditioner Administrator has set running mode, then the air conditioner cannot run on modes other than the presented. Standby or No Priority will be displayed in the Control Panel.

4.6 Features of heating operation

- Warm air will not be blown out immediately at the beginning of the heating operation, 3~5 minutes ago (depends on the indoor and outdoor temperature), until the indoor heat exchanger become hot, then blows out warm air.
- During operation, the fan motor in the outdoor unit may stop running under high temperature.
- During Fan Operation, if other Indoor Units are running on Heating Mode, the fan may stop to prevent sending heat wind.

4.7 Defrost in the heating operation

- During heating operation, outdoor unit sometimes will frost. To increase efficiency, the unit will start defrosting automatically (about 2~10 minutes), and then water will be drained out from outdoor unit.
- During defrosting, both the fan motors in the outdoor unit and indoor unit will stop running.

5 MALFUNCTION CODE OF OUTDOOR UNIT

Table 5-1 (12/14/16KW)

Display	Malfunction or Protection
H0	M_Home unmatching（Reserve）
E0	EEPROM Fault
E2	Communication fault of the outdoor chip and the indoor chip
E3	Communication error between Main board and IR341
E4	Outdoor unit sensor fault
E5	Voltage protection fault
E6	Direct-current fan fault
E7	Heating fan fault in the area A lasts for 5 minutes
E8	There are two times E6 fault in 10 minutes (recovery will be after power off)
P0	The cooling fin high temperature protection
P1	High pressure protection
P2	Low pressure protection
P3	Compressor current protection
P4	Discharge temperature protection
P5	Outdoor condenser high temperature protection
P6	IPM modules protection
P7	Evaporator high temperature protection
P8	Typhoon protection

Display Function Instruction:

1. When stand by, LED displaying the number of indoor units online which communicate with outdoor units.
2. When operation, LED displaying frequency value of compressor.
3. When defrost, LED displaying “dF”.

Table 5-2 (8/10.5/18kW)

Display	Malfunction or Protection
E2	Communication malfunction between indoor/outdoor units
E4	T3&T4 temperature sensor malfunction
E5	Power voltage protection
E6	Fan Protection
E7	Compressor discharge temperature sensor malfunction
E9	EEPROM malfunction
EA	A fan in the A region run for more than 5 minutes in Heat mode
Eb	2 times of E6 protection in 10 minutes
H0	Communication malfunction between IR341/main board
P1	Hi-pressure protection
P2	Low-pressure protection
P3	Input current protection
P4	Compressor discharge protection temperature
P5	Condenser high temperature protection
P6	Inverter module protection
P8	Typhoon protection
PE	Indoor evaporator hi-temp protection
L0	Module malfunction
L1	DC generatrix low voltage protection
L2	DC generatrix high voltage protection
L3	Reserved
L4	MCE malfunction/simultaneously/cycle loop
L5	Zero speed protection
L6	Reserved
L7	Wrong phase protection
L8	Speed difference>15Hz protection between the front and the back clock
L9	Speed difference>15Hz protection between the real and the setting speed

Display Function Instruction:

1. When stand by, LED displaying the number of indoor units online which communicate with outdoor units.
2. When operation, LED displaying frequency value of compressor.
3. When defrost, LED displaying “dF”.

6. FOLLOWING SYMPTOMS ARE NOT AIR CONDITIONER TROUBLES

Symptom 1: The system does not operate

- The air conditioner does not start immediately after the ON/OFF button on the remote controller is pressed.
  If the operation lamp lights, the system is in normal condition. To prevent overloading of the compressor motor, the air conditioner starts 3 minutes after it is turned ON.

- If the operation lamp and the "PRE-DEF indicator (cooling and heating type) or fan only indicator (cooling only type)" light, it means you choose the heating model, when just starting, if the compressor has not started, the indoor unit appears "anti-cold wind" protection because of its overflow outlet temperature.

Symptom 2: Change into the fan mode during cooling mode

- In order to prevent the indoor evaporator frosting, the system will change into fan mode automatically, restore to the cooling mode after soon.

- When the room temperature drops to the set temperature, the compressor goes off and the indoor unit changes to fan mode; when the temperature rises up, the compressor starts again. It is same in the heating mode.

Symptom 3: White mist comes out of a unit

Symptom 3.1: Indoor unit

- When humidity is high during cooling operation If the interior of an indoor unit is extremely contaminated, the temperature distribution inside a room becomes uneven. It is necessary to clean the interior of the indoor unit. Ask your dealer for details on cleaning the unit. This operation requires a qualified service person

Symptom 3.2: Indoor unit, outdoor unit

- When the system is changed over to heating operation after defrost operation Moisture generated by defrost becomes steam and is exhausted.

Symptom 4: Noise of air conditioners cooling

Symptom 4.1: Indoor unit

- A continuous low "shah" sound is heard when the system is in cooling operation or at a stop.
  When the drain pump (optional accessories) is in operation, this noise is heard.

- A "pishi-pishi" squeaking sound is heard when the system stops after heating operation.
  Expansion and contraction of plastic parts caused by temperature change make this noise.

Symptom 4.2: Indoor unit, outdoor unit

- A continuous low hissing sound is heard when the system is in operation.
  This is the sound of refrigerant gas flowing through both indoor and outdoor units.

- A hissing sound which is heard at the start or immediately after stopping operation or defrost operation.
  This is the noise of refrigerant caused by flow stop or flow change.

Symptom 4.3: Outdoor unit

- When the tone of operating noise changes.
  This noise is caused by the change of frequency.

Symptom 5: Dust comes out of the unit

- When the unit is used for the first time in a long time.
  This is because dust has gotten into the unit.

Symptom 6: The units can give off odours

- The unit can absorb the smell of rooms, furniture, cigarettes, etc., and then emit it again.

Symptom 7: The outdoor unit fan does not spin.

- During operation. The speed of the fan is controlled in order to optimize product operation.

7. TROUBLESHOOTING

7.1. Troubles and causes of air conditioner

If one of the following malfunctions occur, stop operation, shut off the power, and contact with your dealer.

- The operation lamp is flashing rapidly (twice every second)
  This lamp is still flashing rapidly after turning off the power and turn on again.

- Remote controller receives malfunction, or the button does not work well.

- A safety device such as a fuse, a breaker frequently actuates.

- Obstacles and water enter the unit.

- Water leaks from indoor unit.

- Other malfunctions.

If the system does not properly operate except the above-mentioned cases or the above-mentioned malfunctions is evident, investigate the system according to the following procedures. *(see in Table 7-1)*

Table 7-1

Symptoms	Causes	Solution
Unit does not start	• Power failure. • Power switch is off. • Fuse of power switch may have burned. • Batteries of remote controller exhausted or other problem of controller.	• Wait for the comeback of power. • Switch on the power. • Replication. • Replace the batteries or check the controller.
Air flowing normally but completely can't cooling	• Temperature is not set correctly. • Be in 3 minutes protection of compressor.	• Set the temperature properly. • Wait.
Units start or stop frequently	• Refrigerant is too little or too much. • Air or no concreting gas in the refrigerating circuit. • Compressor is malfunction. • Voltage is too high or too low. • System circuit is blocked.	• Check leakage, and rightly recharge refrigerant. • Vacuum and recharge refrigerant. • Maintenance or change compressor. • Install manostat. • Find reasons and solution.
Low cooling effect	• Outdoor unit and indoor unit heat exchanger are dirty. • The air filter is dirty. • Inlet/outlet of indoor/outdoor units is blocked. • Doors and windows are open • Sunlight directly shines. Too • much heat resource. Outdoor • temp. is too high. Leakage of • refrigerant or lack of refrigerant.	• Clean the heat exchanger. • Clean the air filter. • Eliminate all dirties and make air smooth. • Close doors and windows. • Make curtains in order to shelter from sunshine. • Reduce heat source. • AC cooling capacity reduces (normal). • Check leakage and rightly recharge refrigerant.
Low heating effect	• Outdoor temperature is lower than 7 ℃ • Doors and windows not completely closed. • Leakage of refrigerant or lack of refrigerant.	• Use heating device. • Close doors and windows. • Check leakage and rightly recharge refrigerant.

7.2 Troubles and causes of remote controller

Before asking for serving or repairing, check the following points.

(see in Table 7-2)

Table 7-2

Symptoms	Causes	Solution
The fan speed cannot be changed.	● Check whether the MODE indicated on the display is "AUTO"	When the automatic mode is selected, the air conditioner will automatically change the fan speed.
	● Check whether the MODE indicated on the display is "DRY"	When dry operation is selected, the air conditioner automatically changes the fan speed. The fan speed can be selected during "COOL", "FAN ONLY", and "HEAT"
The remote controller signal is not transmitted even when the ON/OFF button is pushed.	● Check whether the batteries in the remote controller are exhausted.	The power supply is off.
The TEMP. indicator does not come on.	● Check whether the MODE indicated on the display is FAN ONLY	The temperature cannot be set during FAN mode.
The indication on the display disappears after a lapse of time.	● Check whether the timer operation has come to an end when the TIMER OFF is indicated on the display.	The air conditioner operation will stop up to the set time
The TIMER ON indicator goes off after a lapse of certain time.	● Check whether the timer operation is started when the TIMER ON is indicated on the display.	Up to the set time, the air conditioner will automatically start and the appropriate indicator will go off.
No receiving tone sounds from the indoor unit even when the ON/OFF button is pressed.	● Check whether the signal transmitter of the remote controller is properly directed to the infrared signal receiver of the indoor unit when the ON/OFF button is pressed.	Directly transmit the signal transmitter of the remote controller to the infrared signal receiver of the indoor unit, and then repeatedly push the ON/OFF button twice.

MD14U-025BW
202000172622

MAIN OFFICE
Blasco de Garay, 4-6
08960 Sant Just Desvern
(Barcelona)
Tel. +34 93 480 33 22
http://home.frigicoll.es/
http://www.kaysun.es/

MADRID
Senda Galiana, 1
Polígono Industrial Coslada
Coslada (Madrid)
Tel. +34 91 669 97 01
Fax. +34 91 674 21 00
madrid@frigicoll.es